SEW EURODRIVE

The future is straightforward and safe: Gear units and motors in a modular system

Gearmotors

Another milestone at SEW-EURODRIVE: Safe worldwide standards for each drive solution

This brochure on our new modular system for gearmotors documents once more the values we live by in our company. It shows that you can rely on SEW-EURODRIVE in every respect. Because the new modular system fulfills our brand promise in many ways. It includes technically unique innovations, opens up even more possibilities for selecting the right drive solution, simplifies the configuration of components and provides investment security worldwide.

The redevelopment of the tried and tested DT/DV motor series has turned all gearmotor variants of SEW-EURODRIVE into modern innovation carriers of the highest quality. The new AC motor series DR encompasses the entire range of efficiency ratings including NEMA Premium® energy efficient motors, a logical consequence of the developments in environmental policies worldwide.

In the future, gearmotors from SEW-EURODRIVE will continue to fulfill all standards worldwide. What's more, by integrating them into a standardized modular system, SEW-EURODRIVE has become the first manufacturer to offer energy efficient motors along with conventional AC motors within one series. Each motor includes three brake variants, ensuring a cost-optimized solution. Last but not least, the DR series is the best SEW-EURODRIVE motor that has ever been launched. At the same time, the new motor series offers the same advantages that have made the DT/DV series successful in millions of drive solutions worldwide. These include, above all, power, compact design, versatility, reliability and long service life. Together with many other benefits, also in combination with our drive electronics components, they have turned our gearmotors into what they are today: **state-of-the-art drive technology.**

This brochure gives you a complete overview of all possible gearmotor variants. The content is divided into gear units, motors and accessories / options. At the end of each section, clearly structured tables give an overview of matching components for your individual drive solution.

Driving the world – with innovative drive solutions that deliver superior performance for a vast range of applications in every industry – from automotive production to building materials manufacturing, from food & beverage handling to metals processing. When you choose drive technology "made by SEW-EURODRIVE" you are getting a return on your power transmission investment that is second to none.

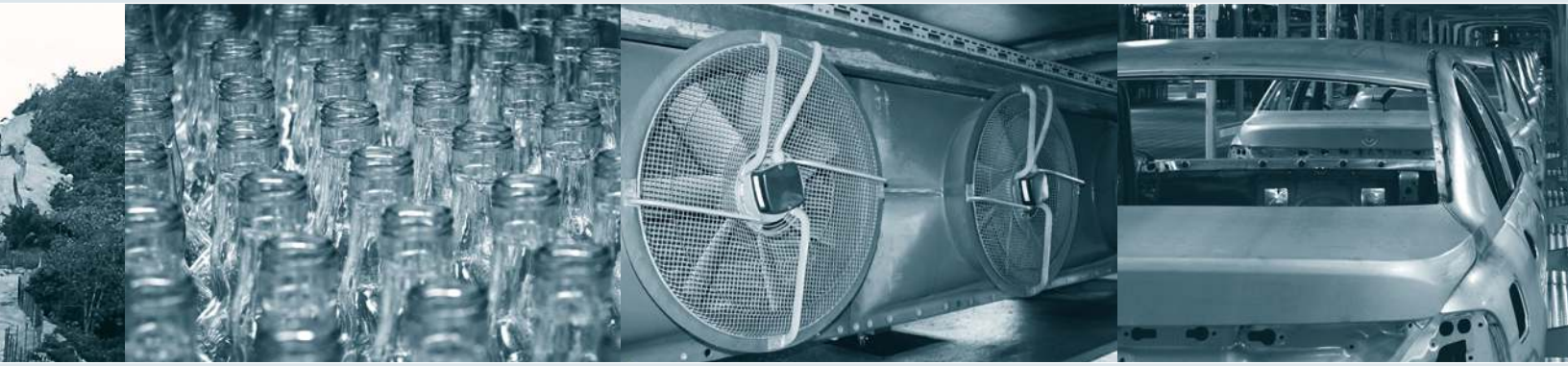

The area of application for our gear units: the world

We do not exaggerate when we proudly say: There is no industry and no drive application in the world for which our gear units in combination with the required motors would not offer excellent performance. Areas of application include: automotive engineering, the food and beverage industries, logistics (airport logistics, intralogistics and port logistics), the water and wastewater treatment industries, the wood processing, construction and construction materials industries, and countless special applications.

Depending on power requirements, space and technical specifications, SEW-EURODRIVE offers the full range of gear units in a modular system: helical, parallel shaft helical, helical-bevel, helical-worm, and SPIROPLAN® right-angle gear units. Input covers, motor adapters and various shaft and mounting options of the gear unit family are also available from SEW-EURODRIVE.

Helical gear units (R): always the optimum space/performance ratio

With six single-stage and fourteen two- and three-stage sizes covering a power range from 440 to 159,000 lb-in, our helical gear units always offer an optimum balance between performance and space requirements. The fine graduation and variety of torque ratings and gear ratios is unrivaled. They also satisfy demands for high output speeds or low weight due to the many available sizes.
The result: one helical gear unit will always fit.

Helical gear units (R)

Type	Maximum output torque [lb-in]	Gear ratio [I]	Gear ratio multi-stage gear unit [i]
RX series (single-stage) Sizes 57 / 67 / 77 / 87 / 97 / 107	610 … 7,340	1.3 … 8.65	–
R series (two- and three-stage) Sizes 07 / 17 / 27 / 37 / 47 / 57 / 67 / 77 / 87 / 97 / 107 / 137 / 147 / 167	440 … 159,300 (also with reduced backlash)	3.21 … 289.74	90 … 27,001
RM series (two- and three-stage) Sizes 57 / 67 / 77 / 87 / 97 / 107 / 137 / 147 / 167	3,980 … 159,300	4.29 … 289.74	134 … 27,001
* RESF37 (stainless steel)	1,770	3.41 … 134.83	–

The gear units Series R gear units are available in the following designs:
- **Single- or multi-stage**
- **Foot or flange-mounted version**
- **Foot and flange-mounted version**
- **Flange-mounted design with extended output bearing hub**
- *** The RESF37 is available as a gearmotor or as a gear unit with C-face input.**

Parallel shaft helical gear units (F): tailor-made for adverse space conditions

The particularly slim-fit parallel shaft helical gear units are used wherever space is limited. Various mounting positions and designs make for a large range of applications even under adverse conditions. Thanks to its construction characteristics and its large torque range from 1,060 to 159,300 lb-in, this standard gear unit is an ideal solution for many materials handling and process engineering applications.

Parallel shaft helical gear units (F)

Type	Maximum output torque [lb-in]	Gear ratio [I]	Gear ratio multi-stage gear unit [i]
F series (two- and three-stage) Sizes 27 / 37 / 47 / 57 / 67 / 77 / 87 / 97 / 107 / 127 / 157	1,060 … 159,300 (also with reduced backlash)	3.77 … 281.71	87 … 31,434

Helical-bevel gear units (K): strong performance and high efficiency in a very compact design

The compact design of all our gear units is most obvious in our helical-bevel gear units. They are sophisticated right-angle gear units for all engineering applications that require space-saving installation. At the same time, they provide a powerful torque range from 1,770 to 442,500 lb-in.

They ensure a remarkably high degree of efficiency of more than 96 per cent in both torque directions and for any input speed. A gear unit built to last: The gearing is designed for high endurance and thus makes for a high-torque, wear-free drive.

Helical-bevel gear units (K)

Type	Maximum output torque [lb-in]	Gear ratio [I]	Gear ratio multi-stage gear unit [i]
K series Sizes 37 / 47 / 57 / 67 / 77 / 87 / 97 / 107 / 127 / 157 / 167 / 187	1,770 … 447,500 (also with reduced backlash)	3.98 … 197.37	94 … 32,625
* KESA37 (stainless steel)	1,770	3.98 … 106.38	–

The efficiency optimized KESA37 helical-bevel gear units are characterized by their special housing design and the use of high-quality stainless steel, making their surface easy to clean and highly resistant to acids and alkalis. Units are available with seals and connections providing protection ratings up to IP69K.

The gear unit series F and K are available in the following designs:

- **Foot or flange-mounted version**
- **B5 flange-mounted version**
- **B14 flange-mounted version**
- **With solid shaft or hollow shaft**
- **With hollow shaft with keyed connection, shrink disc, splined hollow shaft or TorqLOC®**
- *** The KESA37 is available as a gearmotor or as a gear unit with C-face input.**

Helical-worm gear units (S): simple design for increased cost-effectiveness

The strength of the helical-worm gear units is their simple mechanical structure. Tailored individually to torque and speed requirements, they save installation space and costs when implemented in simple applications. In addition to the large gear ratio in the worm gear stage, our helical-worm gear units also offer a significantly higher level of efficiency than pure worm gear units. Power is transmitted linearly to the drive shaft and the torque shocks are reduced – making for a low noise level. Their torque range runs from 800 to 35,400 lb-in.

Helical-worm gear units (S)

Type	Maximum output torque [lb-in]	Gear ratio [I]	Gear ratio multi-stage gear unit [i]
S series Sizes 37 / 47 / 57 / 67 / 77 / 87 / 97	800 … 35,400	6.80 … 288	110 … 33,818

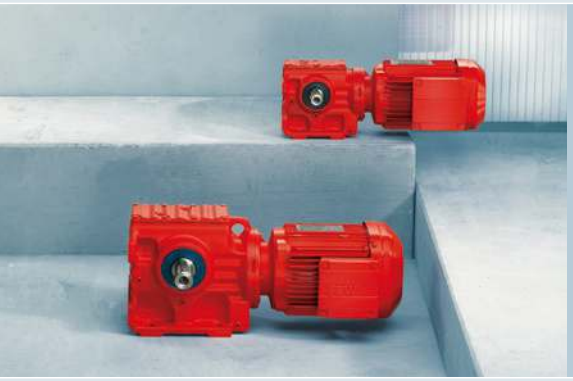

SPIROPLAN® right-angle gear units (W): low-noise, lightweight, efficient

The single-stage SPIROPLAN® right-angle gearmotors deliver their power reliably and quietly. In the power range from 0.12 to 3 HP, the SPIROPLAN® series provides output torque ratings up to 1,590 lb-in – its wear-free gearing ensuring very quiet operation. In combination with the compact design and the light-weight aluminum housing, the noise level is almost perfectly low. The oil filling is independent of the mounting position which means SPIROPLAN® gearmotors can be used universally and are nearly maintenance free. The gear ratio range offers highest output speeds and optimized mechanical efficiency.

SPIROPLAN® right-angle gear units (W)

Type	Maximum output torque [lb-in]	Gear ratio [I]
W10	220	3.91 … 75.00
W20	350	6.57 … 75.00
W30	620	6.57 … 75.00
New: W37	970	3.5 … 70.00
New: W47	1,590	3.5 … 70.00

The gear unit series S and W are available in the following designs:
- **Foot or flange-mounted version**
- **B5 flange-mounted version**
- **B14 flange-mounted version**
- **With solid shaft or hollow shaft**

Additional designs of the gear unit series S:
- **With hollow shaft with keyed connection, shrink disc, splined hollow shaft or TorqLOC®**

The new modular motor system: one single series for millions of drive combinations

Configuring gearmotors with AC motors from SEW-EURODRIVE has never been easier: A modular system comprising a single series of the new DR motors offers all efficiency levels, including NEMA Premium® energy efficient motors. In 2002, SEW-EURODRIVE was the first manufacturer worldwide to use die-cast copper technology in an industrial high-volume production process for the manufacturing of our energy efficient motors.

Other new features in the new modular system are the option to choose between three different brake sizes, depending on the motor size, and cost-optimized encoders built into the motor.

All motor innovations and designs of the new DR series are available for all efficiency classes. They comply with all worldwide standards and already fulfill the forthcoming EISA and IEC standards. For planners and users, they offer a number of unique benefits.

Overview of benefits:

- Very simple configuration and ordering
- Configuration of all motor variants from one single series
- More options, fewer restrictions
- Saves space and costs due to compact design
- Long life from an environmental and regulatory point of view
- Reduced prices for energy efficient motors due to integration with gear unit
- Reduced prices due to selection of different brake sizes

The efficiency classes of the future

The efficiencies of the energy efficient motors from SEW-EURODRIVE comply with international limit values and standards, often exceeding the requirements.

The list of regulations comprises:
- **USA** EISA 2007
- **Canada** CSA C390
- **Europe** CEMEP, renewed voluntary agreement
- **Brazil** NBR7094, PROCEL
- **Australia/New Zealand** MEPS 2006

Premium Efficiency	IE3 (NEMA Premium®)
	USA, Canada, Australia and New Zealand – Premium efficiency level[1] – 4-pole AC motors of the DRP type (energy efficient motors): 1 – 50 HP – Copper or aluminum die-cast rotor cage
High Efficiency	**IE2**
	USA, Canada, Europe, Brazil, Australia and New Zealand – High efficiency level[1] – 4-pole AC motor of the DRE type (energy efficient motors): 1 – 300 HP – Copper or aluminum die-cast rotor cage
Standard Efficiency	**IE1**
	Europe, Asia, Africa, Central and South America without Brazil – Standard efficiency level – 4-pole AC motors of the DRS type (standard motors): 0.37 – 200 kW – Copper or aluminum die-cast rotor cage

[1] U.S. DOE Compliance Certification Number CC056A
For technical data, please refer to page 20.

Brake variants in the modular system

Smaller holding torques are required for inverter operation. An energy efficient motor requires less braking work. Today's brakes are often oversized. This is why the new modular motor system from SEW-EURODRIVE makes it possible to choose from up to three brake sizes for each motor size (overview on page 21).

Additional features of the brake are:
Manual brake release
– Automatic disengaging
– Lockable

Monitoring of
– Function
– Wear

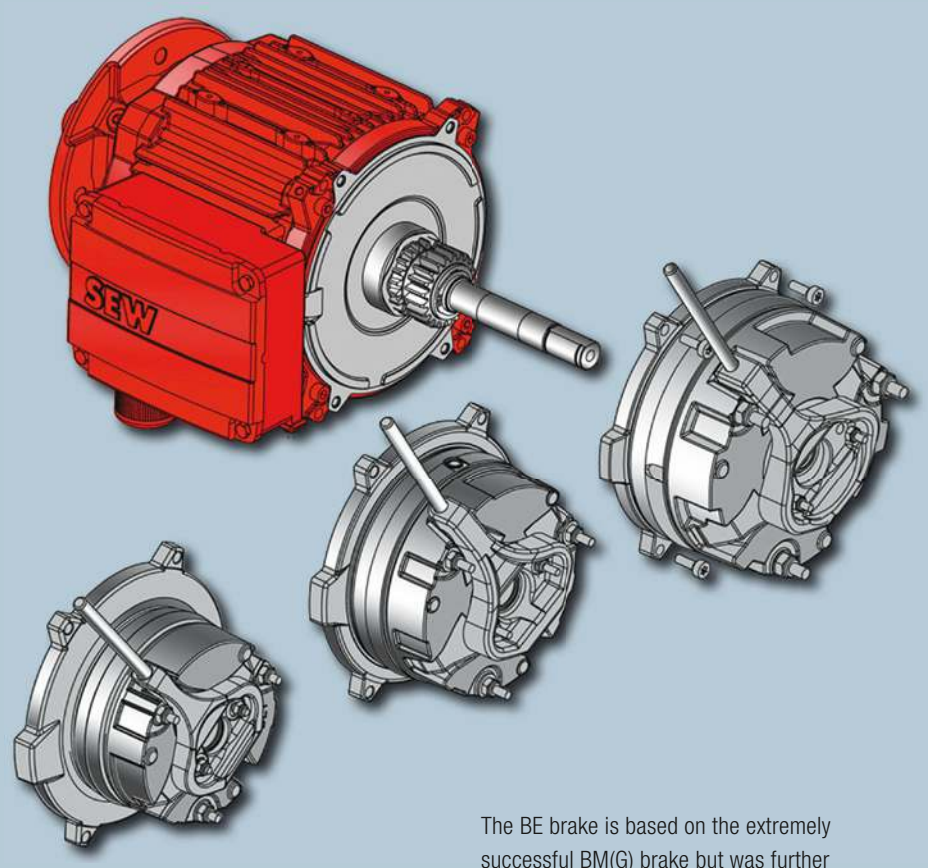

The BE brake is based on the extremely successful BM(G) brake but was further developed in many aspects.

The built-in encoder is fully integrated into the motor

Many applications require simple speed and position detection. In the past, complex and expensive mounted encoders or elaborate proximity sensors have been used to fulfill these requirements. SEW-EURODRIVE offers a unique and cost-optimized solution: the built-in encoder, first introduced with the new DR series. It is fully integrated into the motor and connected at the motor terminal box. Due to its simple structure, the built-in encoder can be retrofitted.

Mounting flexibility also on the input end

SEW-EURODRIVE offers optimum solutions for the gear unit family, providing more flexibility and efficiency on the input side. Input covers and motor adapters are characterized by compact dimensions, low weight and long service life. Tailored specifically to our gear units, these components ultimately increase the economic efficiency of the drive as a whole.

SEW-EURODRIVE offers eight different cover sizes for different power ratings. These options enable optimum connection of the drive components depending on the gear unit and the drive task. Take the height adjustment for covers, for example, with a height-adjustable motor mounting platform that allows for simple installation and startup. Or the integrated backstop, which ensures compact drive design and optimum operating characteristics.

A variety of input options are available, including an adapter for NEMA C-face motors.

Adapters open up more possibilities

In addition to the integrated torque limiting coupling, there is an adapter variant with integrated hydraulic centrifugal coupling. It is equipped with protection against overheating as standard. An integrated mechanical brake and an integrated backstop are optional. With the AM motor adapters, all NEMA motors size 56 to 365 and all IEC motors size 63 to 280 can be mounted to the 7-series gear units. The AQ adapter accepts servomotors – either servomotors with positive key connection (AQA) or non-positive connection with a clamping ring hub (AQH).

Installation does not get much easier: The TorqLOC® hollow shaft mounting system

SEW-EURODRIVE'S TorqLOC® is a compact keyless hollow shaft mounting system that adds versatility to SEW 7-Series hollow shaft reducers. Installation is simple and fast because there are no interference fits that have to be overcome. The TorqLOC® system mounts with bronze tapered bushings, so it does not seize to the shaft, and is as easy to remove as it is to install – even after years of constant exertion in the harshest environments.

Since its design is so versatile and interchangeable, customers quickly see a significant reduction in the costs of new machines as well as replacement expenses. And, TorqLOC® lives up to its name: there is no need to cut a keyway on the existing shaft – it is keyless and locks by torque alone.
By using interchangeable bushings, the TorqLOC® mount fits a wide variety of standard sized shafts.

Finally, to reduce machining time, there is no need to turn the shaft to exacting tolerances. TorqLOC® fits on existing machinery.
TorqLOC®'s innovative design received the 2002 Product of the Year Award from Plant Engineering Magazine for new products that lead to ground-breaking improvements at the production level.

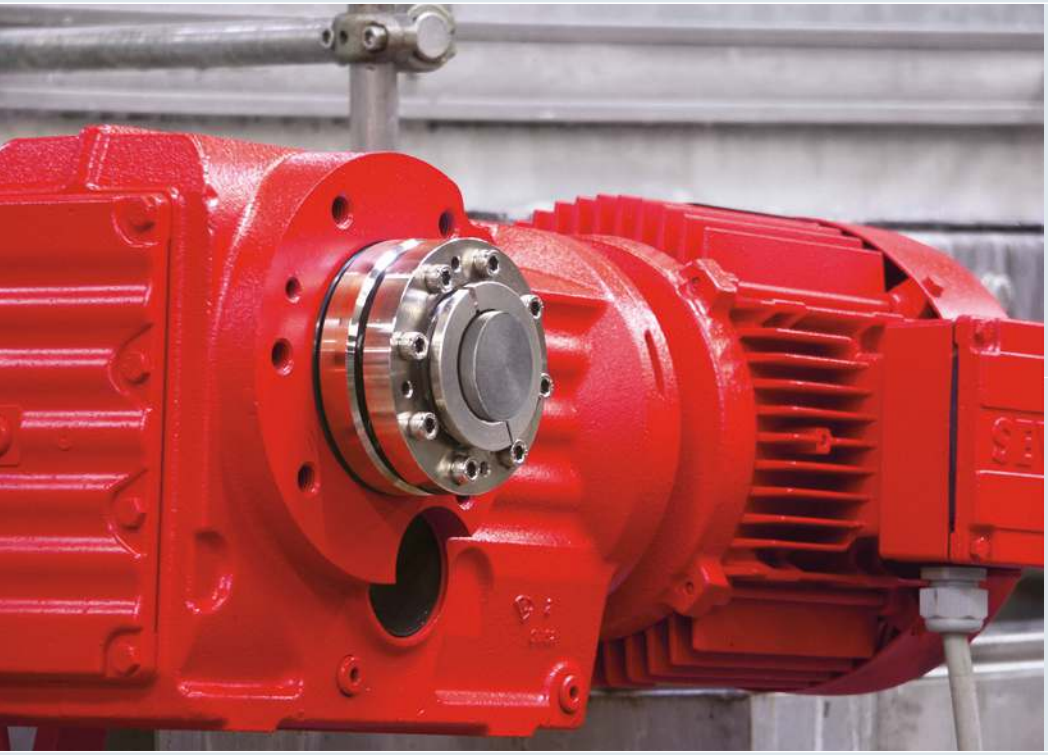

TorqLOC® offers the keyless advantage of the shrink disc without the disadvantages of a keyed shaft or shrink disc through design characteristics such as:

No Bearing Preload:
Since the clamping forces are located on the outside of the gear reducer, no component forces act against bearings. Bearings are not subject to a life-shortening preload.

No Axial Movement:
The clamping forces are radial only – not axial. Gear reducers do not slide axially on the customer's shaft during mounting.

Close Mounting:
Since the clamping ring is needed only on one side, the gear reducer may be mounted very close to the customer's machine.

Corrosion Resistant:
TorqLOC® is available in stainless steel to prevent corrosion.

No Keyway:
TorqLOC® does not need a keyway to transmit torque.

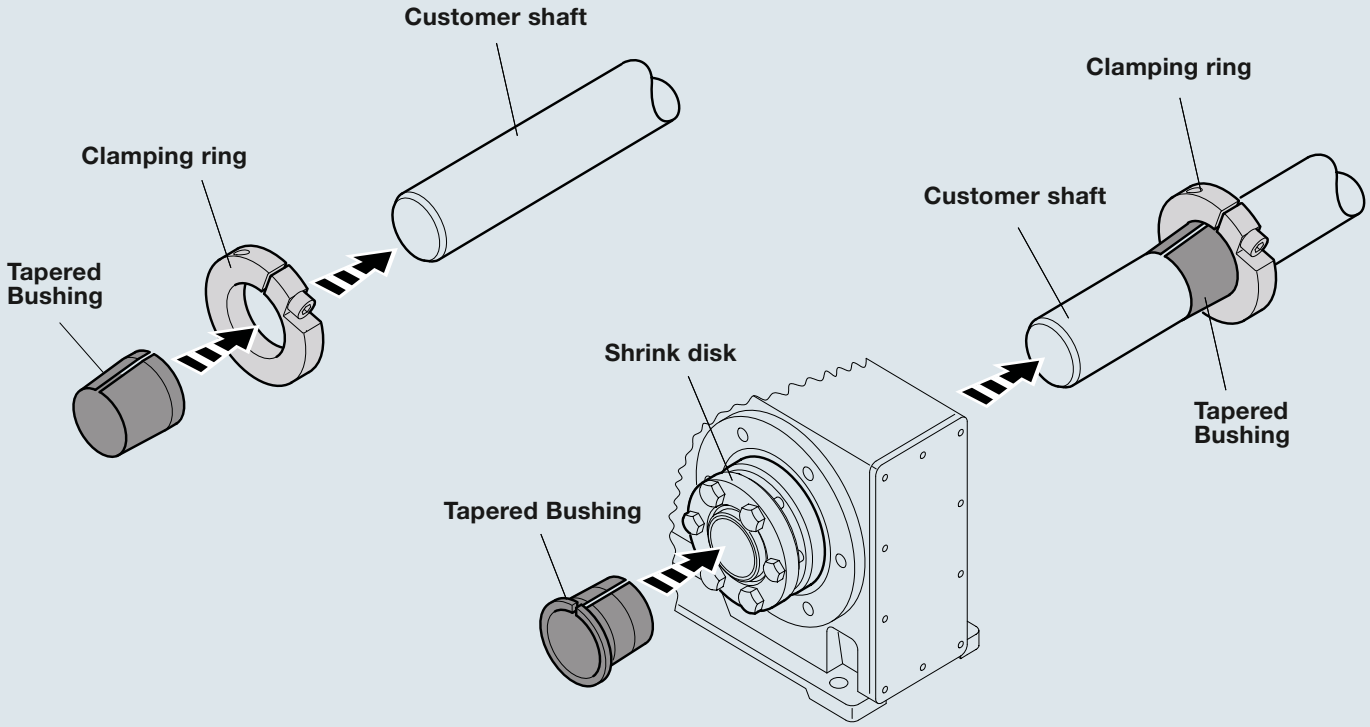

All you need is a PC to discover our range of almost unlimited possibilities

Printed documentation, CD-ROMs or downloads: As diverse as the product range of SEW-EURODRIVE are the tools supporting the designer in the planning and design phase. The comprehensive information material and the product-supporting software are a fast and simple tool for drive selection and its integration in the machine or system design.

Order or download from the Internet

A series of publications entitled “Drive Engineering – Practical Implementation,” such as volume 1 “Project Planning for Drives,” product documentation (Docu ROMs) and presentations (CBI-ROM) on CD-ROM or operating instructions, manuals and catalogs offering detailed basic information are available at www.seweurodrive.com.

PT Pilot® Drive Selection Tool

SEW-EURODRIVE makes it easy to design customized solutions for power transmission and motion control applications with PT Pilot® v3.0, our web-based drive selection tool. SEW's modular product designs make it possible to choose from millions of different configurations. Using a standard web browser, PT Pilot® simplifies the choices and offers a solution in minutes. No special software or plug-ins are required. The entire process is intuitive and completely paperless.

To obtain a solution, the user enters either the horsepower and speed requirements, the SEW model number, or the application parameters such as weight and feet per minute. PT Pilot® then displays all options for inverter, gear reducer, and motor that are pertinent to the particular selection. To increase order accuracy for both customers and distributors, PT Pilot® automatically generates SEW nomenclature and order specifications. It even creates a recommended spare parts list for any unit so that the user can compare the new unit price to the repair cost. Each session results in a final quotation with specifications, dimensions, parts lists, CAD files, and net pricing that can be printed out or emailed to place an order. CAD files are available in 2D formats DXF and DWG as well as 3D formats SAT, STEP, IGES, VRML, VDAFS, and 3D-DXF.

Each PT Pilot® session can be saved and opened later to make changes or to place an order. Employees within the same company may share sessions, if desired. Once an engineer completes the design specifications, a purchasing agent can quickly retrieve the quote and place an order.

To explore the full range of intuitive features that PT Pilot® has to offer, visit www.ptpilot.com.

DR series motor power

DR motors / 60 Hz motor power [HP]

Motor size	Standard motors	Energy efficient motors	
	Standard Efficiency Type DRS	High Efficiency[1] Type DRE	Premium Efficiency[1] Type DRP
DR 71	0.25 … 0.75	–	–
DR 80	1.0 … 1.5 [2]	1.0	–
DR 90	2.0 … 3.0 [2]	1.5 … 2.0	1.0 … 2.0
DR 100	4.0 … 5.5 [2]	3.0 … 5.0	–
DR 112	5.5 [2]	–	3.0
DR 132	7.5 … 12.5 [2]	5.4 … 10	5.0
DR 160	12.5 … 20 [2]	12.5 … 15	7.5 … 15
DR 180	20 … 40 [2]	20 … 30	20 … 30
DR 200	40 [2]	40	–
DR 225	50 … 75 [2]	50 … 60	40 … 50
DR 315	150 … 300 [2]	150 … 300	–

[1] U.S. DOE Compliance Certification Number CC056A, [2] Extended lead time. Contact factory for delivery information

DR motors / 50 Hz motor power [kW]

Motor size	Standard motors	Energy efficient motors	
	Standard Efficiency Type DRS	High Efficiency Type DRE	Premium Efficiency Type DRP
DR 71	0.37 … 0.55	–	–
DR 80	0.75 … 1.1	0.75	–
DR 90	1.5 … 2.2	1.1 … 1.5	0.75 … 1.1
DR 100	3.0 … 4.0	2.2 … 3.0	1.5 … 2.2
DR 112	4.0	3.0	–
DR 132	5.5 … 9.2	4.0 … 7.5	3.0 … 5.5
DR 160	9.2 … 15	7.5 … 11	5.5 … 7.5
DR 180	15 … 30	11 … 22	7.5 … 18.5
DR 200	30	22	22
DR 225	37 … 55	30 … 45	30 … 45
DR 315	110 … 200	110 … 200	90 … 160

Overview of brake combinations for the DR motor

Motor type	Maximum braking torque [lb-in]									
	44	88	177	487	974	1,770	2,655	5,310	10,620	21,240
DR 71	BE05	BE1								
DR 80			BE2							
DR 90				BE5						
DR 100										
DR 112					BE11					
DR 132										
DR 160						BE20				
DR 180							BE30	BE32		
DR 200										
DR 225										
DR 315									BE120	BE120

Overview of encoder combinations for DR motor

Motor type	Built-in encoder					Mounted encoder			
	Sin/Cos	HTL 24 PPR	HTL 6 PPR	HTL 2 PPR	HTL 1 PPR	Sin/Cos	TTL (RS-442)	SSI Absolute	RS-485 Absolute
DR 71	EI7S	EI7C	EI76	EI72	EI71	ES7S	ES7R	AS7Y	AS7W
DR 80									
DR 90									
DR 100									
DR 112									
DR 132									
DR 160						EG7S	EG7R	AG7Y	AG7W
DR 180									
DR 200									
DR 225									
DR 315						EH7S		AH7Y	

Summary of features of the DR modular motor system

Additional feature	Description	SEW type designation
Brakes		BE with size designation
Manual brake release	Automatic disengaging	HR
	Lockable	HF
Brake monitoring	Wear / function	DUB
Built-in encoder (DR71-132)	HTL	EI7C /EI76 / EI72 / EI71
	Sin/Cos	EI7S
Shaft-encoder (DR71-132 / DR160-225)	Sin/Cos	ES7S / EG7S
	HTL	ES7C / EG7C
	TTL	ES7R / EG7R
	SSI	AS7Y / AG7Y
	RS-485 Absolute	AS7W / AG7W
Shaft-mounted hollow shaft encoder (DR315)	Sin/Cos	EH7S
	SSI Absolute	AH7Y
Thermal motor protection	3 PTC resistors (thermistor)	TF
	3 bimetallic switch (thermostat)	TH
Temperature measuring	1 or 3 PT100 units	PT
	1 KTY84-130 unit	KY
Back stop	Instead of brake; CW or CCW direction of rotation blocked	RS
Plug connectors	Integrated in terminal box	IS
	Mounted (types from Harting)	AC../AS../AM../AB../AD
Forced cooling fan		V
Canopy		C
Air filter		LF
Fan	Aluminum	AL
	Cast Iron (additional inertia)	Z
Condensation drain holes		DH
Second shaft end		2W
MOVIMOT® (DR71-100)		MM with size designation
MOVI-SWITCH® (DR71-100)		MSW

How we're driving the world

With uncompromising quality that reduces the cost and complexity of daily operations.

With drives and controls that automatically improve your productivity.

With comprehensive knowledge in virtually every branch of industry today.

With industry-leading training and 24-hour technical support, nationwide.

SEW-EURODRIVE
Driving the world

With a global presence that offers responsive and reliable solutions. Anywhere.

With a worldwide service network that is always close at hand.

With innovative technology that solves tomorrow's problems today.

With online information and software updates, via the Internet, available around the clock.

SEW-EURODRIVE – Wherever you are, we are

North America:

Midwest Region
Assembly Center
SEW-Eurodrive, Inc.
Troy, OH
Tel. (937) 335-0036
Fax (937) 332-0038
cstroy@seweurodrive.com

Northeast Region
Assembly Center
SEW-Eurodrive, Inc.
Bridgeport, NJ
Tel. (856) 467-2277
Fax (856) 845-3179
csbridgeport@seweurodrive.com

Southeast Region
Assembly Center
SEW-Eurodrive, Inc.
Lyman, SC
Tel. (864) 439-7537
Fax (864) 439-7830
cslyman@seweurodrive.com

Southwest Region
Assembly Center
SEW-Eurodrive, Inc.
Dallas, TX
Tel. (214) 330-4824
Fax (214) 330-4724
csdallas@seweurodrive.com

Western Region
Assembly Center
SEW-Eurodrive, Inc.
Hayward, CA
Tel. (510) 487-3560
Fax (510) 487-6433
cshayward@seweurodrive.com

Mexico
SEW-Eurodrive Sales and Distribution SA de CV
Queretaro, Mexico
Tel. (011) 52-442-103-0300
Fax (011) 52-442-103-0301
scmexico@seweurodrive.com.mx

SEW-Eurodrive Co. of Canada Ltd.
Bramalea, Ontario
Tel. (905) 791-1553
Fax (905) 791-2999
marketing@sew-eurodrive.ca

SEW-Eurodrive Co. of Canada Ltd.
Delta, B.C.
Tel. (604) 946-5535
Fax (604) 946-2513
marketing@sew-eurodrive.ca

SEW-Eurodrive Co. of Canada Ltd.
LaSalle, Quebec
Tel. (514) 367-1124
Fax (514) 367-3677
marketing@sew-eurodrive.ca

1686 4336 / 0110US

SEW EURODRIVE

www.seweurodrive.com (U.S.)
www.sew-eurodrive.ca (Canada)